S30 SERIES
INSTRUCTION MANUAL

CONTROLS

OUTPUT LED
The red LED indicates the output status.

STABILITY LED
The green LED ON indicates that the received signal has a safety margin greater than 30% compared to the output switching value.

POWER ON LED (S30-x-G50)
The red LED indicates that the sensor is operating.

SENSITIVITY TRIMMER / ADJUSTMENT SCREW (S30-x-M110)
This control can be used to adjust sensitivity (trimmer) or cutoff distance (screw); the operating distance increases turning the control clockwise.

T-ON TRIMMER and T-OFF TRIMMER (S30-x-xxxxT)
The trimmers can be used to adjust the timing function.

WARNING: *The trimmers rotation is limited to 270° by a mechanical stop. Do not apply excessive torque when adjusting (max 20 Nmm).*

TIMER OPERATING MODE SELECTOR (S30-x-xxxxT)
This control can be used to select the timing mode.

DARK/LIGHT SWITCH / TIME BASE SWITCH (S30-x-xxxxT)
The switch selects the DARK/LIGHT mode or the timing range (S30-x-xxxx-T).

CONNECTIONS

TERMINAL BLOCK VERSION

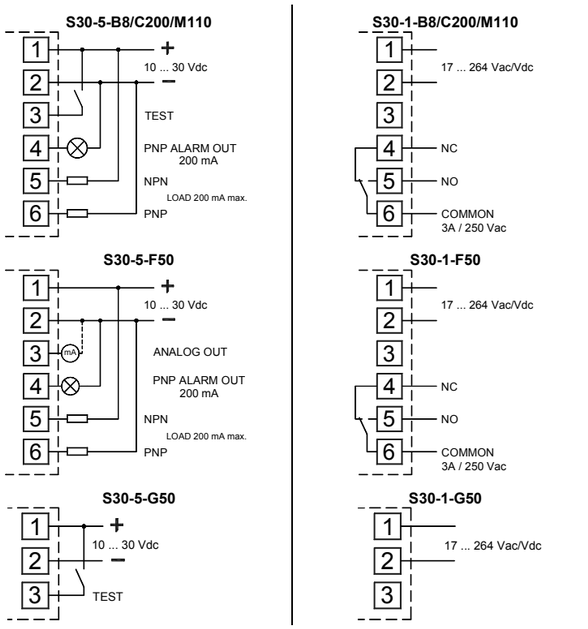

M12 CONNECTOR VERSION

DIMENSIONS

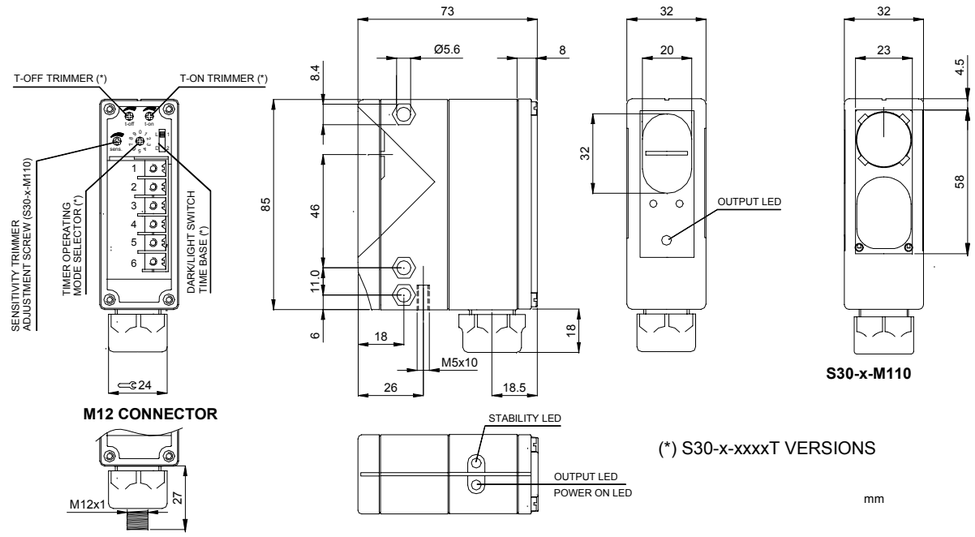

TECHNICAL DATA

	S30-5-x	S30-1-x
Power supply:	10 … 30 Vdc limit values	17 ÷ 264 Vca/Vdc (48 … 60 Hz) limit values
Ripple:	2 Vpp max.	-
Current consumption (output current excluded):	40 mA max. 70 mA mod. S30-x-xxxx-M	60 mA max. 90 mA mod. S30-x-xxxx-M
Output:	NPN/PNP; 30 Vdc max.	Relay 1 NO and NC contact 250 Vac, 30 Vdc
Output current:	200 mA max. (short-circuit protection)	3 A max. (resistive load)
Analog output:	0.3 mA max. mod.F50	-
Output saturation voltage:	1.5 V max. (NPN/PNP output)	-
Response time:	1 ms max.	20 ms max.
Switching frequency:	500 Hz max.	10 Hz max.
Indicators:	OUTPUT LED (RED) / secondary OUTPUT LED (RED) excluding mod.M110 / STABILITY LED (GREEN) / POWER ON LED mod.G50	
Setting:	1-turn sensitivity trimmer wiper idles / DARK/LIGHT switch / operating distance adjustment screw wiper idles mod. M110 ***S30-x-xxxx-T:*** timing operating mode selector / time base switch / T-ON trimmer / T-OFF trimmer	
Operating temperature:	-25 … 55 °C	
Storage temperature:	-25 … 70 °C	
Electric shock protection:	Class 1	
Operating distance (minimum):	B8: 0.1 … 8 m on R5 C200: 5 … 200 cm M110: 20 … 110 cm F50/G50: 0 … 50 m	
Timing ranges:	range 1: 0.02 s … 2 s / range 2: 0.2 s … 12 s	
Emission type:	INFRARED (880 nm) / RED (660 nm) mod. B8	
Ambient light rejection:	according to EN 60947-5-2	
Vibration:	0.5 mm amplitude, 10 … 55 Hz frequency, for every axis (EN60068-2-6)	
Shock resistance:	11 ms (30 G) 6 shock for every axis (EN60068-2-27)	
LIGHT/DARK selection:	by switch	
Housing:	Glass fiber-reiforced polycarbonate	
Lenses:	PMMA plastic / Glass mod. S30-x-xxxx-M)	
Protection class:	IP67	
Connections:	terminal block (recommended cable diameter from 5 to 12 mm) / M12 4-pole connector	
Weight:	165 g. max.	

TIMING DIAGRAM (S30-x-xxxT)

OPERATIVE MODE			TIMING OPERATING	OUTPUTS
LIGHT mode range 1 (L 1 / D 2)		Normal (timing disabled)	7	
	t-on	One shot	6	
	t-off t-on	ON/OFF Delay	5	
	t-on	ON Delay	4	
	t-off	OFF Delay	3	
DARK mode range 2 (L 1 / D 2)		Normal (timing disabled)	8	
	t-on	One shot	9	
	t-off t-on	ON/OFF Delay	0	
	t-on	ON Delay	1	
	t-off	OFF Delay	2	

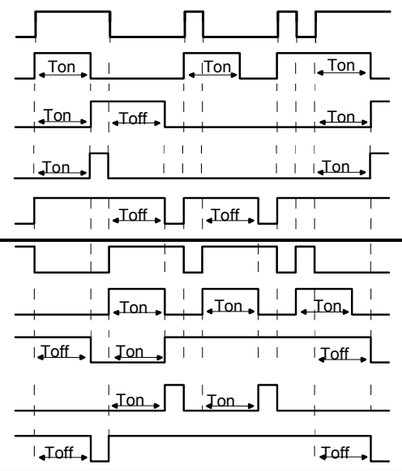

SETTING

The following procedures are valid for LIGHT mode operation.
Alignment S30-x-B8
Position the sensor and reflector on opposite sides.
Turn the sensitivity trimmer to maximum. Find the points where the red LED (OUT) is switched ON and OFF in both vertical and horizontal positions, and fix the sensor in the centre between these points.
Optimum operation is obtained when both LEDs switch ON.
If necessary, reduce sensitivity using the trimmer, in order to detect very small targets.
In order to improve alignment, repeat the procedure detailed above whilst progressively reducing the sensitivity.
Alignment S30-x-F50/G50
Position the sensors on opposite sides.
Turn the sensitivity trimmer to maximum. Find the points where the red LED (OUT) is switched ON and OFF in both vertical and horizontal positions, and fix the sensor in the centre between these points.
Optimum operation is obtained when both LEDs switch ON.
If necessary, reduce sensitivity using the trimmer, in order to detect very small targets.
In order to improve alignment, repeat the procedure detailed above whilst progressively reducing the sensitivity.
Alignment S30-x-C200
Position the sensor and turn the sensitivity trimmer at minimum:
the green LED is ON and the red LED is OFF.
Place the target opposite the sensor. Turn the sensitivity trimmer clockwise until the red LED turns ON *(Target detected state, pos.A)*.
Remove the target, the red LED turns OFF. Turn the trimmer clockwise until the red LED turns ON *(Background detected state, pos.B)*.
The trimmer reaches maximum if the background is not detected. Turn the trimmer in intermediate position C, between the two positions A and B. The green LED must be ON.

Alignment S30-x-M110
Position the sensor and turn the adjustment screw to maximum.
Place the target opposite the sensor at a slightly greater distance than desired. Turn the screw counterclockwise until the sensor switches.
Verify the adjustment moving the target closer and further the sensor; tune the adjustment if necessary.
It is recommended to operate with the stability LED turned ON.

TEST FUNCTION (S30-5-B8/C200/M110/G50)

The TEST input can be used to inhibit the emitter and verify that the system is correctly operating.
The sensor output should switch when the test is activated while received signal is high (uninterrupted beam for B8/F50/G50 models; target detected for C200/M110 models).
The inputs activating voltage range is 10 … 30 Vdc, whilst respecting the polarity.

ALARM FUNCTION (S30-5-B8/C200/M110/F50)

The alarm output switches ON whenever the received signals remains without a safety margin (greater than 30% compared to the output switching level) for longer than 3 seconds.

ALIGNMENT ANALOG OUTPUT (S30-5-F50)

The analog output can be used to make the alignment easier; proceed as follows:
1. mechanically align emitter and receiver;
2. connect one or two amperometers in series (see drawing);
3. power ON the sensors;
4. move both horizontally and vertically the emitter first, then the receiver to find the maximum current. The current measured by the amperometers is proportional to the received signal level. Progressively reduce sensitivity in order to avoid output saturation (0.25 mA max.)
5. After the alignment phase, completely disconnect the output.

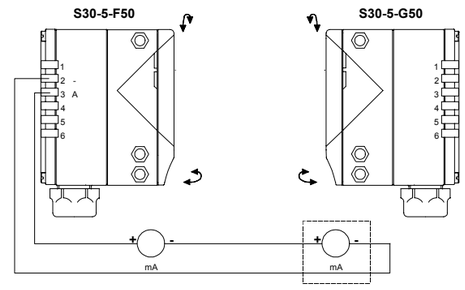

DECLARATION OF CONFORMITY
We DATASENSOR S.p.A. declare under our sole responsibility that these products are conform to the 89/336 CEE, 73/23 CEE Directives and successive amendments.

WARRANTY
DATASENSOR S.p.A. warrants its products to be free from defects.
DATASENSOR S.p.A. will repair or replace, free of charge, any product found to be defective during the warranty period of 36 months from the manufacturing date.
This warranty does not cover damage or liability deriving from the improper application of DATASENSOR products.

DATASENSOR S.p.A. Via Lavino 265
40050 Monte S. Pietro - Bologna - Italy
Tel: +39 051 6765611 Fax: +39 051 6759324
http://www.datasensor.com e-mail: info@datasensor.com

DATASENSOR S.p.A. cares for the environment: 100% recycled paper.
DATASENSOR S.p.A. reserves the right to make modifications and improvements without prior notification.

826000643 Rev.C